SHOWBIZ Pizza®

INSTALLATION AND OPERATION MANUAL

CYBERSTAR™

TABLE OF CONTENTS

Packing List 3
Pre-Installation 5
Monitors 7
Block Diagram 9
Installation 11
JVC BR7000 19
Operation 21
VCR Adjust & Diagnostics 25
Symetrix Calibration 29
Character Bit Chart 31
Schematics 43
Trouble Shooting 59

SPP CYBERSTAR PACKING LIST

BOX 1 _____ 1: JVC BR7000 VCR

BOX 2 _____ 1: Fisher RK8600U VCR RACK MOUNT KIT

BOX 3 _____ 1: TRIAD CYBERSTAR SHOW CONTROLLER
_____ 1: CYBERSTAR SHOW CONTROLLER POWER SUPPLY CABLE
_____ 1: 12' SHOW DATA CABLE
_____ 1: VCR TRANSPORT CONTROL CABLE
_____ 1: JUMPER CABLE TO A/V ROUTING SWITCHER

BOX 4 _____ 1: TRIAD A/V ROUTING SWITCHER
_____ 1: A/V ROUTING SWITCHER POWER SUPPLY

BOX 5 _____ 1: SYMETRIX 571 AUTOMATIC LEVEL COMPUTER
_____ 1: MANAGER CONTROL PANEL
_____ 1: 75' MANAGER CONTROL CABLE w/DB9 conn.
_____ 1: 75' 3 COND. REMOTE GAIN CABLE
_____ 1: 150' BNC-BNC VIDEO CABLE
_____ 2: 3' BNC-BNC VIDEO CABLES
_____ 1: REALISTIC SUPER-OMNI SENSE MICROPHONE
_____ 1: 100' SENSE MICROPHONE EXTENSION CABLE
_____ 2: 3' RCA-RCA AUDIO CABLES
_____ 1: INSTALLATION MANUAL
_____ 2: CYBERSTAR SHOWTAPES
_____ 1: CYBERSTAR VCR ADJUST TAPE (BETA I)
_____ 1: HOUSE LIGHT ADAPTER BOARD

BOX 6 _____ 1: WINSTEAD RACK MOUNT TAPE BIN

NOTE: *IF ANY ITEMS ARE MISSING, PLEASE CONTACT BRIAN AT CREATIVE PRESENTATIONS*

(800) 635-2689 OUTSIDE CA.
(800) 635-0524 INSIDE CA.

SPP CYBERSTAR PRE-INSTALLATION

The installation of the ShowBiz CYBERSTAR system is an overnight job. Installation should start in the evening (Sun-Wed) shortly after closing time. Do NOT attempt this installation on a Thurs-Sat night!

The following items MUST be checked prior to installation of the CYBERSTAR system. If any of these items does not conform to specifications, it must be remedied before installation:

SHOW POWER SUPPLIES - Both 24v. supplies should be adjusted to EXACTLY 25 volts DC and the 5v. supplies should read from 4.95v. to 5.25v. with the show NOT playing. Verify that both supplies are supplying sufficient current for the show. You can do this by monitoring the output of the supply with a voltmeter or oscilloscope while a birthday show is playing. Momentary drops in voltage (current foldback) are not acceptable.

BACKGROUND MUSIC AMP - The main background music amplifier must be moved to the control room. Route all cables so that the amp can be positioned on top of the audio rack or on a shelf near the audio rack. The CYBERSTAR system must be connected to the background music amplifier.

FAMILY VISION PROJECTOR SCREEN - The screen up/down control cable must be relocated from the interactive animation booth to the audio rack in the control room.

INTERACTIVE ANIMATION - Although Interactive Animation will operate with Cyberstar, it is highly recommended that the Interactive Animation system be removed prior to installation of Cyberstar. Leaving Interactive Animation in place will prevent taking full advantage of the audio quality capabilities of Cyberstar. Also, due to Cyberstar's continuous play mode, Interactive Animation can only be operated during Background Music segments.

MONITORS - The corporate approved monitor is a NEC PM2571A. All monitors should be mounted and operational prior to installation of the Cyberstar system.

A 150' BNC-BNC cable is provided with your Cyberstar System. This cable is to be used as needed for your Cyberstar monitors. It can be cut to length (if you have additional BNC connectors) or it can be run to the camera input jack of the video distribution amp used for the pick up system and then use that existing wiring to run to your monitors.

CYBERSTAR MONITOR INFORMATION

Only professional monitors should be used with CYBERSTAR. The corporate approved monitor is an NEC PM2571A.

All monitors should be mounted and wired PRIOR to installation of the rest of the CYBERSTAR system. All monitors should be daisy-chained (video out of one feed video in of the next in line) with all monitors except the last in the chain set to high impedance. The last monitor must be set to terminate in the 75 ohm position.

Two monitors are a minimum and four or more are highly recommended. If the minimum of two monitors are used, they are to be hung in the Show Room between the stages and in front of the curtain valance. This mounting location is to be used as future show software calls for interaction of show characters with characters appearing on the monitors. Hanging of the mounts and monitors should be done by outside contractors. This is not a job for the store technician. The monitors and mounts weigh 90 lbs. and must be secured to roof braces with metal brackets only. Contractor labor should run approximately $100 - $150 per monitor not including electrical outlets.

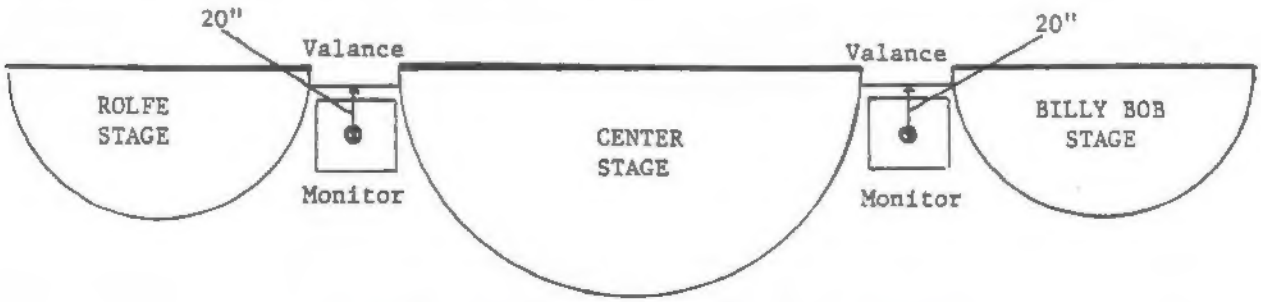

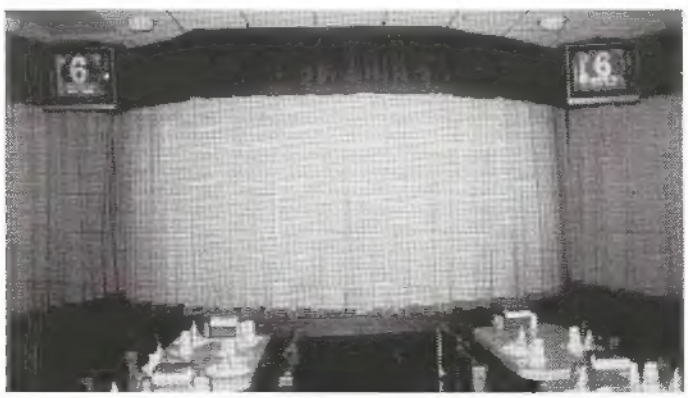

CYBERSTAR

AUDIO/VIDEO BLOCK DIAGRAM

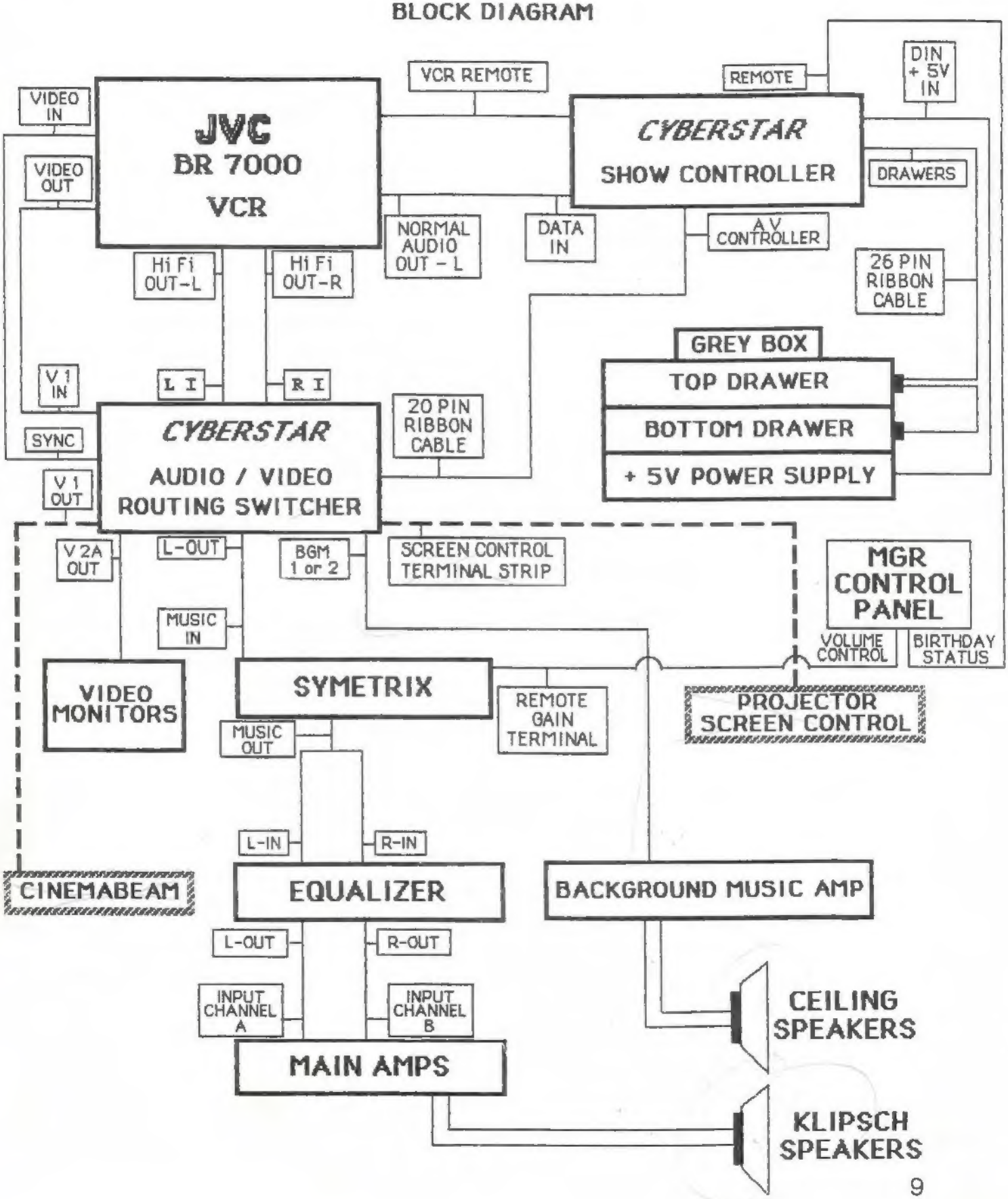

SPP CYBERSTAR INSTALLATION

READ ALL installation instructions and refer to the system block diagram prior to beginning the actual installation.

Steps 21 through 26 can be assigned to a competent assistant to be begun while the technician begins the rest of the installation. If an assistant is not available, the technician may run the cables described in steps 21-26 the day before the final installation.

WARNING! Disconnect power from the audio rack and computer before beginning the disassembly!

1. _____ Remove the reel-to-reel tape decks from the audio rack. Be sure to disconnect all cables from the rear of the decks before removing them. Save all audio cables for use with CYBERSTAR.

2. _____ Remove the dbx/tape select box from the audio rack. Save all audio cables.

3. _____ Remove ALL audio cables from the audio rack with the exception of those connected to the equalizer, main amplifiers and speakers.

4. _____ Install the Symetrix controller and then the VCR rack mount kit directly above the UREI equalizer.

Note: *Due to the weight of the VCR, the rack mount kit must be attached to the front AND back support rails of the audio rack. This may require some drilling in the back of the audio rack. See the manufacturers notes enclosed with the rack mount kit for installation details.*

5. _____ Install the JVC BR7000 VCR in the rack and mount the VCR front cover panel. Next mount the CYBERSTAR A/V Routing Switcher directly above the VCR and then mount the CYBERSTAR Show Controller above the A/V Routing Switcher.

Note: *The Winstead rack mount tape bin will mount directly above the Cyberstar Show Controller but can wait until the rest of the system has been installed and is operational.*

6. _____ Using an RCA patch cable (removed from reel-to-reel tape decks), connect the Audio Out (Hi-Fi) outputs from the VCR to the LI (left input) and RI (right input) jacks on the rear of the CYBERSTAR A/V Routing Switcher. Make sure to match the proper channels (left to left and right to right).

7. _____ Using another RCA patch cable, connect the Audio Out left (normal) output of the VCR to the Data input on the CYBERSTAR Show Controller.

8. _____ Using one of the 3 ft. BNC-to-BNC cables, connect the VIDEO IN input of the VCR to either of the outputs labeled "SYNC" on the CYBERSTAR A/V Routing Switcher. Use the other 3 ft. BNC-to-BNC cable to connect the VIDEO OUT output of the VCR to the VIDEO 1 IN jack on the CYBERSTAR A/V Routing Switcher.

9. _____ Make sure that the FULL REPEAT switch on the back of the VCR is in the OFF position. Also verify that the Video AGC, HiFi Record and Noise Reduction switches grouped together on the front of the VCR are all in the OFF position.

10. _____ The video line from the monitors (gameroom and showroom) plugs into the V2A OUT output of the CYBERSTAR A/V Routing Switcher. If you have a projection TV, the video line from it will plug into the V1 OUT jack.

Note: *Showroom and gameroom monitors should be daisy-chained (video out of one feeds video in of the next in line) and the last monitor on the line should be terminated (lo impedance - 75 ohms).*

11. _____ After verifying that the power is off on the show computer, remove the Playback boards from the top and bottom drawers. Remove the Tape Control Card from the Dual PC mount (the bottom card below the house light dim board in the bottom drawer.)

12. _____ Connect the ribbon cable from the CYBERSTAR Show Controller connection marked 'Drawers' to the tunnel connection where the Playback boards were just unplugged. Observe that the proper cable from the CYBERSTAR Show Controller is in the proper drawer. The connector in the middle of the cable goes to the top drawer and then loops to the bottom drawer where the connector at the end of the ribbon cable plugs into the tunnel. Connect the twenty pin jumper ribbon cable from the Show Controller to the A/V Routing Switcher. OBSERVE POLARITY ON ALL RIBBON CONNECTIONS.

13. _____ Plug the House Light adapter board into the Dual PC Mount where the Tape Control card was.

14. _____ Remove the output wires from one of the 5 volt power supplies in the grey cabinet and parallel them to the other 5 volt power supply. Then route the Cyberstar Show Controller power supply cable (2 cond. tinned - DIN plug) through the power cable access hole in the rear of the grey cabinet and connect with the now available 5 volt power supply in the front of the grey cabinet (both drawers operating on one 5 volt supply and the Cyberstar Show Controller operating solely on the other 5 volt supply.) OBSERVE POLARITY, Black to Green (ground) and White to Orange (+5v.) Attach wire ties to dress out the cable.

15. _____ Connect the power cords to the Symetrix unit, CYBERSTAR A/V Routing Switcher, and the JVC BR7000 VCR. The A/V Routing Switcher has a special power supply that plugs into a 5-pin DIN plug on the rear of the unit.

16. _____ Using an RCA patch cable, clip the plug from one end and strip and tin the leads. Plug the RCA end into the jack marked "L" on the CYBERSTAR A/V Routing Switcher (left audio out). The shielded portion of the bare end of the wire should be connected to the terminal block on the Symetrix unit marked "MUSIC IN GND". The center conductor should be connected to the terminal marked "MUSIC IN +". Connect a jumper from the "MUSIC IN GROUND" to the "MUSIC IN Low (-)."

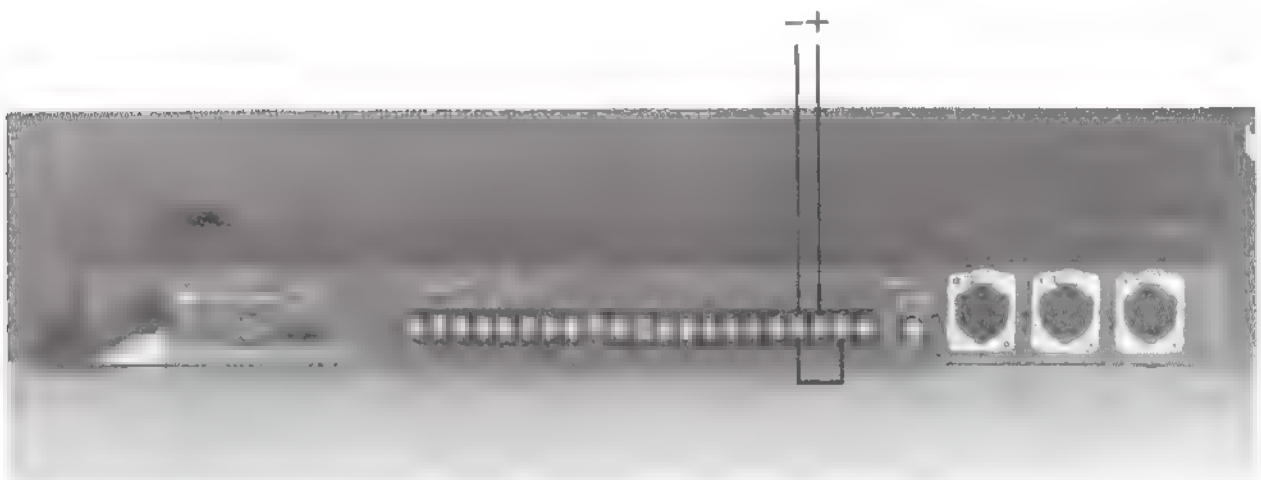

17. _____ Be sure that the FORMAT switch on the rear of the Symetrix unit is switched to MUSIC.

18. _____ You will find two wires that come from the inputs of the UREI equalizer. Clip the RCA plugs from the ends of these wires and strip and tin the ends. These wires will be tied together in parallel (Shield to shield, center to center). Then connect the shield to the terminal marked "OUTPUT GND" on the rear of the Symetrix unit. Connect the center conductor to the terminal marked "OUTPUT +". Do NOT connect anything to the LOW (-) OUTPUT.

Note: *The outputs of the UREI equalizer should still be connected to the inputs of the YAMAHA amplifiers. The audio path is now complete. Audio travels from the outputs of the VCR (Hi-Fi Audio Out) to the inputs of the CYBERSTAR A/V Routing Switcher (LI and RI). From the output of the CYBERSTAR A/V Routing Switcher ("L" left audio out), the audio travels to the MUSIC IN input of the Symetrix. The OUTPUT of the Symetrix feeds both input channels of the UREI equalizer. The outputs of the UREI equalizer then feed the inputs of the main amplifiers. Check to make sure that the input ground selector switch above the cannon jacks on the back of the Yamaha amps are both to the OUTSIDE position (pin 3 HOT.)*

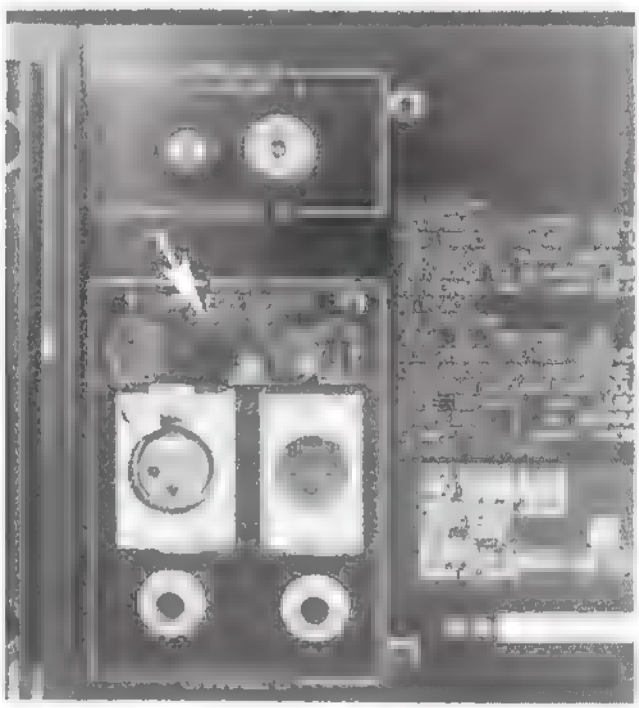

19. _____ There are two options for connecting the background music amp to the CYBERSTAR system. Normally, you connect the "BGM 2" audio out of the CYBERSTAR A/V Routing Switcher to the input of your background music amp. If you do not want birthday shows to play over your background music system, then connect the background music amp to the "BGM 1" output of the A/V Routing Switcher. If the "BGM 1" output is selected, you must disconnect the ceiling speakers in the showroom and no mic paging will be heard in the showroom.

20. _____ Connect the Transport Control cable from the CYBERSTAR Show Controller to the remote jack on the JVC VCR.

21. _____ The sensing microphone may now be mounted in the showroom ceiling. Pick a spot near the center of the showroom but as far as possible from any ceiling-mounted background music speakers. You should mount the microphone to the ceiling tile with the microphone body through the ceiling and it should point downward.

22. _____ The 100 ft. extension cable for the sensing microphone should be connected to the microphone. Run the cable through the ceiling to the control room.

23. _____ The other end of the 100 ft. extension cable (sensing mic.) should be plugged into the SENSE MIC 1 input of the Symetrix unit. The microphone will now provide ambient noise sensing to the unit.

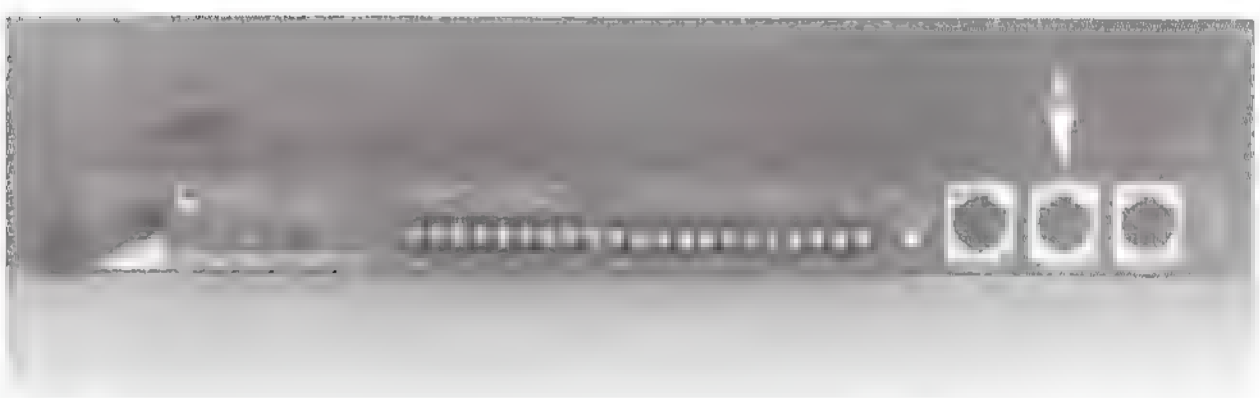

24. _____ THIS STEP FOR PROJECTION TV LOCATIONS ONLY! Locate the screen up/down control cable previously used by the Family/Vision controller. This will be a seven-conductor cable coming from the projection screen. Find the orange wire and the red wire, strip them, and tie them

together. Then, locate the green wire and the black wire and strip both of them. All other wires in this cable are unused. Connect the red/orn wire to the COM terminal next to RAISE and LOWER on the lower terminal block of the CYBERSTAR A/V Routing Switcher. Connect the green wire to the RAISE terminal and the black wire to the LOWER terminal.

25. _____ Run the 75 ft. manager control cable in the ceiling from the control room to the showroom. The end with the DB9 should be in the control room while the bare ends will be in the showroom. At the same time run the 3 conductor remote gain cable alongside the manager control cable.

26. _____ After drilling a mounting hole in the showroom wall, run the cable down through the wall and through the hole. Attach the manager control panel and the remote gain pot to the cables as described below. Then, mount the panel to the wall or hostess station with screws.

The manager control panel should be wired as follows:

DB9	Wire color	Manager Control Panel Terminals
Pin 1	Brown wire	B'day warning LED (red LED)
Pin 3	Green wire	B'day select LED (green LED)
Pin 6	Red wire	B'day switch
Pin 8	Black wire	B'day switch ground
Pin 9	White wire	+5v LED limit resistors (the limit resistor terminals must be jumpered on the manager control panel terminal strip)

27. _____ Plug the manager control cable into the CYBERSTAR Show Controller and remove the jumpers and hookup the remote gain wires to the Symetrix as described in the diagram.

Remote Gain to Symetrix wiring:

Symetrix Terminal	Gain Pot Color Code
Pin 2	White
Pin 4	Black
Pin 5	Red

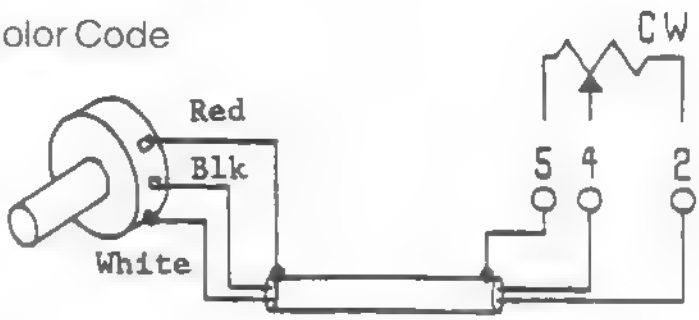

28. _____ Installation is now complete. Refer to the SPP CYBERSTAR OPERATION instructions in the following chapter for starting procedures.

JVC BR7000

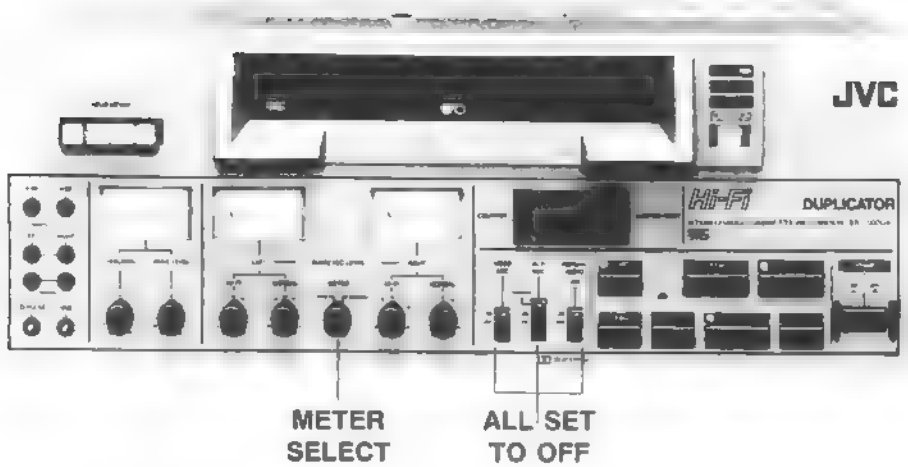
JVC
Hi-Fi
DUPLICATOR
METER SELECT
ALL SET TO OFF

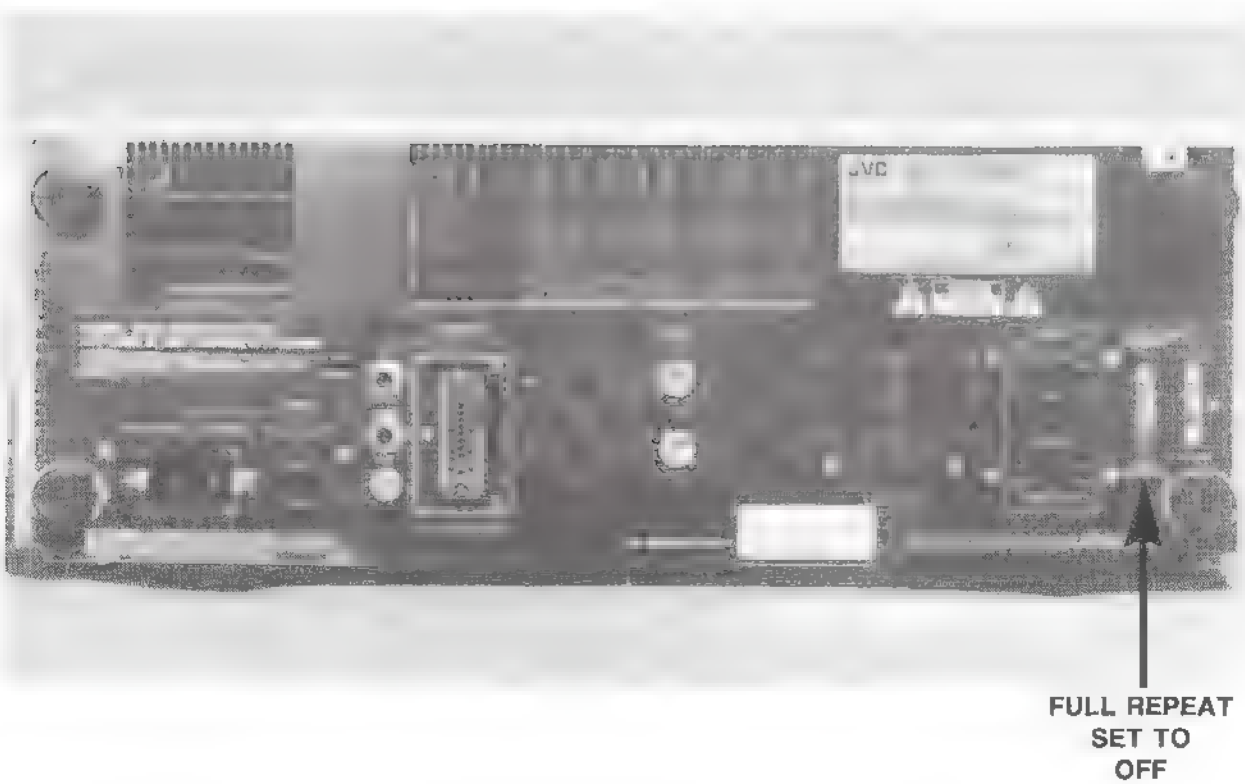
JVC
FULL REPEAT SET TO OFF

SPP CYBERSTAR OPERATION

The following operation guidelines will help you to test the operation of your CYBERSTAR system. If you encounter any problems during testing, refer to the troubleshooting section.

Turn power on to the grey controller and check the Show Controller. The Alert LED should be lit and the LCD displaying the software version identifier message. Turn power on to the audio rack and make sure that the individual power switches for each component of the audio system are on. Push the 'mode' button on the Symetrix unit twice and note that the 'bypass' LED is flashing. This means that the Symetrix is in bypass mode. Refer to the Symetrix Level Control Calibration section for proper calibration procedures.

Insert a CYBERSTAR showtape into the VCR. The VCR should rewind if needed and begin to play at the beginning of the tape. Verify that data is present on the tape by switching the meters to 'Normal'. The Left VU meter should show a steady signal at approximately 0 VU. Now switch the meters to 'Hi-Fi'. The VU meters should now indicate the music level (probably background music). Now verify that data is being fed to the Show Controller by watching the LCD panel on the front of the show controller. The display should change from the CYBERSTAR Software Version Identifier Message to "skit in progress" until the first countdown sequence begins and then display "CYBERSTAR (C) 1989." At this time, the monitors should be displaying the video countdown. This verifies proper data decoding by the Show Controller.

You may now turn up the volume controls on the main show amplifiers and the background music amplifier so that the background music is at a comfortable level. Verify that music is present at all speakers in the showroom and throughout the background music system.

Check the operation of the manager control panel. Pushing the 'Birthday Select' button should toggle the 'Birthday Indicator' LED on and off. The 'Birthday Warning' indicator should begin to flash approximately three minutes before a birthday show becomes available (for the first three minutes of each background / countdown segment.) The LED will stop flashing once the beginning of the 'birthday window' has been passed.

While in the showroom, check that you have good, stable video on the monitors. Monitors should display a countdown before shows start and they should also display video during the cartoon segments and all Rock-A-Fire show segments.

Each countdown segment has a horseshoe shaped ring of adjacent blue spheres surrounding the rotating number in the center of the screen. Every 10 seconds one of the spheres will change from blue to bronze in a counter-clockwise manner. When all of the Spheres have changed to bronze, the Birthday will begin if selected. This is a "clock" for employees to judge when the birthday will begin and whether they want to play it or wait until the next available Birthday show. At any time, including during a show, birthday or cartoon, up until all the spheres have turned bronze during a countdown, the next available Birthday show can be either selected for play or deselected to not play.

Select a birthday show by pressing the 'Birthday Select' button on the manager control panel. The green LED lit indicates that the next available birthday show will play. Three minutes after the beginning of the countdown, the birthday show should play and the video countdown continue on the monitors.

During the next background music segment, verify that the 'Birthday Indicator' is off. When the countdown spheres have all changed to bronze (three minutes after the beginning of the countdown), background music should continue and birthday audio should not be heard and the characters should not be moving.

Holding in the 'Birthday Select' button for approximately 8 seconds will make the green LED start flashing. This indicates an 'emergency hold' mode and the tape will stop when the beginning of the Birthday Show is reached. The system will then wait indefinitely until the 'Birthday Select'

button is pressed again at which time the Birthday Show will play. Due to the handling of the tape in the mode, it is to be used in emergencies only when a birthday is absolutely required and can't wait until the next available birthday on the tape (never longer than 15 minutes.) Excessive use of this feature may cause premature tape and VCR failures.

At the end of the CYBERSTAR showtape, a rewind signal should cause the tape to be rewound back to the beginning. The rewind process takes about three minutes. During this time, no video or background music will be seen / heard. If the system has performed correctly to this point, you now have a working CYBERSTAR system!

POWER DOWN PROCEDURE - The procedure to power down the system is to press the UP and DOWN buttons on the Show Controller at the same time and hold them in until the tape ejects from the VCR. Then power down the rest of the system as you did previous to Cyberstar. The tape must be ejected from the system at night in order to maintain its proper life. Shutting off power to the VCR with the tape in the machine will keep the tape spooled around the heads and will shorten the life of the tape as well as add unneeded stress to the VCR transport.

WARNING! Under NO circumstances should the Record button ever be used. This machine will record over a tape even with the Record Protect tab removed.

CYBERSTAR VCR ADJUST & DIAGNOSTICS ROUTINE

A diagnostic routine has been incorporated in the Show Controller software to enable the technician to set up CYBERSTAR for VCR Adjusting the characters and a new routine that allows the Show Controller to cycle each character movement for troubleshooting. This new method is NOT to be used for character movement adjustments (the VCR ADJUST TAPE is the only approved method of properly synchronizing character movements) but rather is provided to test the actual physical operation of individual character movements.

With NO tape in the BR7000 and the LCD displaying the CYBERSTAR Software Version Identifier message:

CyberStar	1.0
(c) 1989	TRIAD

Software Version Identifier message

Press the ENTER button once and the LCD display will change to:

DIAGNOSTICS
Press [Enter]

Press the ENTER button once again and the LCD display will change to:

DIAGNOSTICS
VCR ADJUST MODE

Press the ENTER button once again to enter the VCR Adjust mode and the LCD display will change to:

VCR ADJUST MODE

This mode will initiate opening all three curtains and then pass data through the system for VCR Adjustment of the characters. To use the Sony SLP303 Beta machine, run the data line from the Sony VCR to the left Normal input on the JVC BR7000 VCR and adjust the input level to 0 VU.

Play your new VCR Adjust tape just as with the old system viewing the characters on the TV wired to the Sony VCR. The new VCR Adjust tape contains all characters on a single tape starting with Billy Bob. After completing your adjustment, stop the tape at the end of the character you were adjusting and press the reset button on the CYBERSTAR Show Controller to exit the VCR Adjust mode or press ENTER to return to the Software Version Identifier message. A VHS version of the CHARACTER ADJUST TAPE is available to order. It will work in the BR7000 but that machine does NOT have a search mode, so you can not visually search through the tape to find particular areas. The startup procedure for the VHS version is the same as the BETA I. When you have accessed the VCR ADJUST MODE on the LCD display, insert your adjust tape into the BR7000 and manually press the PLAY button on the VCR. The tape will roll and operate the characters with video displaying on the Cyberstar monitors. When you have finished a character, press the EJECT button on the VCR and do not rewind the tape. When you are ready the next day for adjusting the next character, the tape will be ready for that character.

If you wish to access the character movement test routine, when the LCD is displaying:

DIAGNOSTICS VCR ADJUST MODE

Use the UP and DOWN buttons to access the characters (they will display on the bottom line of the LCD display.

DIAGNOSTICS ROLFE

At this point, using the UP and DOWN buttons will allow you to cycle through the characters with the second line of the LCD display showing the current character selected. Cycle through the characters (Looney Bird character movements are contained with Billy Bob) and then return to ROLFE by using the UP and DOWN buttons.

Press the ENTER button once again and the LCD display will change to:

ROLFE Mouth

At this point, using the UP and DOWN buttons will allow you to cycle through the individual character movements for the character displayed on the top line of the LCD display.

Cycle through the character movements and then return to MOUTH by using the UP and DOWN buttons.

Press the ENTER button once again and the LCD display will begin alternating ON and OFF in the upper right hand corner of the LCD display. Go into the Show Room and watch Rolfe. His mouth should be opening and closing at an interval of several seconds.

Pressing the ENTER button again will return the LCD display to the CYBERSTAR Software Version Identifier message. The procedure can be repeated again to select a different movement or a different character. When you are finished with running DIAGNOSTICS, a show tape can be inserted into the VCR and the system will auto startup if the LCD display is showing the Software Version Identifier message or by pressing the RESET button if you are still in the Diagnostic Routine.

SYMETRIX LEVEL CONTROL CALIBRATION

Perform calibration of the Symetrix level control unit after installation and testing of CYBERSTAR is complete.

READ the Symetrix manual BEFORE calibration to familiarize yourself with it.

Use a miniature screwdriver to adjust the SENSE MIC 1 sensitivity control to about 75% of its adjustment range.

Make sure that calibration of the unit is done while a stage show is playing and the showroom is totally empty and quiet before calibrating the unit.

Press the MODE button twice to put the unit into BYPASS mode. The BYPASS LED should flash. Then adjust the main amplifier level controls for a comfortable listening level in the showroom.

Press the MODE button once to exit BYPASS mode and press once again to enter the MINIMUM level calibration mode. Now adjust the MINIMUM level control for the lowest required sound level (empty showroom.) The unit will stay in the MINIMUM calibration for about eight seconds after you have stopped adjusting it.

Now, the unit will automatically go to MAXIMUM level calibration mode. You may now adjust the MAXIMUM level control to a level that would be slightly HIGHER than the highest level you would ever expect it to attain (fully packed showroom.) After eight seconds, the unit will return to its normal mode of operation.

If, at any time, the SENSE INPUT ERROR LED flashes, then you may be having problems with either the physical connection of the sense microphone or the sensitivity adjustment.

The Symetrix unit is now calibrated. Any settings on the equalizer or main amps must be kept EXACTLY as they are. Changing these settings would require recalibration of the unit.

The only audio that should be adjusted unless recalibrating the system is the remote gain control on the manager's control panel.

NOTE: *The only controls that should be adjusted are the AVERAGING TIME and RATIO SENSE:OUTPUT pots.*

The Averaging Time pot determines the amount of time the computer will take before making any volume adjustments (the shorter the time set the faster the unit will make changes.) This control should be set between 90 sec. and 5 min. depending on variables in each location. The exact setting must be determined by the technician over a period of actual use. If the audio levels are changing too often, then adjust the pot slightly clockwise (longer average time) and vice-versa.

The Ratio Sense:Output determines how great a change in level will occur based on the level of crowd noise sensed. This setting must also be determined by the technician over a period of actual use. Start with a setting of 1:1 (12 o'clock position.) If the show volume increases too much in relation to the level of crowd noise, then slightly adjust the Ratio control counter-clockwise and if the show does not get loud enough in relation to the level of crowd noise, then slightly adjust the Ratio control clockwise.

Any adjustments to the Averaging Time or Ratio Sense:Output should be very minor changes and then evaluated over a period of at least 1 full day of operation. Further changes, if needed, should follow the same procedure. It may take several weeks to precisely "tune" the unit to your particular location.

CHARACTER BIT CHARTS
ROLFE

NO.	DESCRIPTION	DRAWER	L.D.#
1	MOUTH	TOP	1
2	LEFT EAR	TOP	9
3	RIGHT EAR	TOP	10
4	LEFT EYELID	TOP	2
5	RIGHT EYELID	TOP	3
6	EYES LEFT	TOP	4
7	EYES RIGHT	TOP	5
8	HEAD LEFT	TOP	6
9	HEAD RIGHT	TOP	7
10	HEAD UP	TOP	8
11	LEFT ARM RAISE	TOP	11
12	LEFT ARM TWIST	TOP	12
13	LEFT ELBOW	TOP	13
14	RIGHT ARM RAISE	TOP	17
15	RIGHT ARM TWIST	TOP	18
16	RIGHT ELBOW TWIST	TOP	19
17	EARL HEAD TILT	TOP	20
18	EARL MOUTH	TOP	36
19	EARL EYEBROW	TOP	37
20	BODY TWIST LEFT	TOP	14
21	BODY TWIST RIGHT	TOP	15
22	BODY LEAN	TOP	16

DOOK

NO.	DESCRIPTION	DRAWER	L.D.#
1	MOUTH	TOP	30
2	LEFT EAR	TOP	23
3	RIGHT EAR	TOP	24
4	LEFT EYELID	TOP	26
5	RIGHT EYELID	TOP	27
6	EYES LEFT	TOP	28
7	EYES RIGHT	TOP	29
8	HEAD LEFT	TOP	25
9	HEAD RIGHT	TOP	21
10	HEAD UP	TOP	22
11	LEFT ARM SWING	TOP	33
12	RIGHT ARM SWING	TOP	34
13	LEFT ELBOW	TOP	35
14	RIGHT ELBOW	TOP	31
15	HI-HAT CYMBAL	TOP	32
16	BASS DRUM	TOP	63
17	BODY LEAN	TOP	64

FATZ

NO.	DESCRIPTION	DRAWER	L.D.#
1	MOUTH	TOP	45
2	LEFT EYELID	TOP	41
3	RIGHT EYELID	TOP	42
4	EYES LEFT	TOP	43
5	EYES RIGHT	TOP	44
6	HEAD LEFT	TOP	54
7	HEAD RIGHT	TOP	55
8	HEAD TIP LEFT	TOP	51
9	HEAD TIP RIGHT	TOP	52
10	HEAD UP	TOP	53
11	LEFT ARM SWING	TOP	57
12	RIGHT ARM SWING	TOP	58
13	LEFT ELBOW	TOP	59
14	RIGHT ELBOW	TOP	60
15	FOOT TAP	TOP	61
16	BODY LEAN	TOP	62

BEACH BEAR

NO.	DESCRIPTION	DRAWER	L.D.#
1	MOUTH	BOTTOM	16
2	LEFT LID	BOTTOM	1
3	RIGHT LID	BOTTOM	2
4	EYES CROSS	BOTTOM	3
5	HEAD LEFT	BOTTOM	6
6	HEAD RIGHT	BOTTOM	7
7	HEAD UP	BOTTOM	8
8	RIGHT ARM RAISE	BOTTOM	11
9	RIGHT ARM TWIST	BOTTOM	12
10	RIGHT ELBOW TWIST	BOTTOM	13
11	RIGHT WRIST	BOTTOM	14
12	LEFT HAND SLIDE	BOTTOM	4
13	GUITAR RAISE	BOTTOM	5
14	LEFT LEG KICK	BOTTOM	9
15	RIGHT LEG KICK	BOTTOM	10
16	BODY LEAN	BOTTOM	15

MITZI

NO.	DESCRIPTION	DRAWER	L.D.#
1	MOUTH	BOTTOM	35
2	LEFT EAR	BOTTOM	26
3	RIGHT EAR	BOTTOM	27
4	LEFT LID	BOTTOM	31
5	RIGHT LID	BOTTOM	32
6	EYES LEFT	BOTTOM	33
7	EYES RIGHT	BOTTOM	34
8	HEAD LEFT	BOTTOM	28
9	HEAD RIGHT	BOTTOM	29
10	HEAD UP	BOTTOM	30
11	LEFT ARM RAISE	BOTTOM	23
12	RIGHT ARM RAISE	BOTTOM	18
13	LEFT ELBOW	BOTTOM	24
14	RIGHT ELBOW	BOTTOM	19
15	LEFT ARM TWIST	BOTTOM	25
16	RIGHT ARM TWIST	BOTTOM	20
17	BODY TWIST LEFT	BOTTOM	36
18	BODY TWIST RIGHT	BOTTOM	37
19	BODY LEAN	BOTTOM	38

BILLY BOB

NO.	DESCRIPTION	DRAWER	L D.#
1	MOUTH	BOTTOM	46
2	LEFT LID	BOTTOM	47
3	RIGHT LID	BOTTOM	48
4	EYES LEFT	BOTTOM	49
5	EYES RIGHT	BOTTOM	50
6	HEAD LEFT	BOTTOM	51
7	HEAD RIGHT	BOTTOM	52
8	HEAD TIP LEFT	BOTTOM	53
9	HEAD TIP RIGHT	BOTTOM	54
10	HEAD UP	BOTTOM	55
11	LEFT HAND SLIDE	BOTTOM	39
12	RIGHT ARM RAISE	BOTTOM	56
13	RIGHT ARM TWIST	BOTTOM	57
14	RIGHT ELBOW TWIST	BOTTOM	58
15	RIGHT WRIST	BOTTOM	59
16	GUITAR RAISE	BOTTOM	40
17	BODY TWIST LEFT	BOTTOM	61
18	BODY TWIST RIGHT	BOTTOM	62
19	FOOT TAP	BOTTOM	44
20	BODY LEAN	BOTTOM	63

LOONEY BIRD

NO.	DESCRIPTION	DRAWER	L.D.#
1	MOUTH	BOTTOM	17
2	LEFT LID	BOTTOM	41
3	RIGHT LID	BOTTOM	42
4	EYES CROSS	BOTTOM	43
5	HEAD LEFT	BOTTOM	21
6	HEAD RAISE	BOTTOM	22

PROPS

NO.	DESCRIPTION	DRAWER	L.D.#
1	SUN MOUTH	TOP	38
2	SUN RAISE	TOP	39
3	DUAL PRESSURE REGULATOR	TOP	40
4	MOON MOUTH	TOP	46
5	MOON RAISE	TOP	47
6	LOONEY BIRD HANDS	TOP	48
7	SPIDER (B'DAY WARNING)	TOP	49
8	BABY BEAR	TOP	50

SPOT LIGHTS

NO.	DESCRIPTION	DRAWER	L.D.#
1	MITZI SPOT	TOP	81
2	BEACH BEAR SPOT	TOP	82
3	LOONEY BIRD SPOT	TOP	83
4	BILLY BOB SPOT	TOP	84
5	FATZ SPOT	TOP	85
6	DOOK SPOT	TOP	86
7	ROLFE SPOT (DOWN)	TOP	87
8	ROLFE SPOT (UP)	TOP	88

CURTAINS

	STAGE RIGHT OPEN	TOP	89
	STAGE RIGHT CLOSE	TOP	90
	CENTER STAGE OPEN	TOP	91
	CENTER STAGE CLOSE	TOP	92
	STAGE LEFT OPEN	TOP	93
	STAGE LEFT CLOSE	TOP	94

S.E. LIGHTS

NO.	DESCRIPTION	DRAWER	L.D.#
1	RAINBOW RED	BOTTOM	94
2	RAINBOW YELLOW	BOTTOM	95
3	APPLAUSE SIGN	BOTTOM	70
4	BLUE BEHIND BACKDROP (4)	BOTTOM	81
5	AMBER ON BACKDROP (2)	BOTTOM	82
6	BLUE ON BACKDROP (2)	BOTTOM	83
7	RED ON BACKDROP (4)	BOTTOM	84
8	BLUE ON BACKDROP (4)	BOTTOM	85
9	BUSHES GREEN-CENTER GREEN	BOTTOM	86
10	BUSHES AMBER-CENTER RED	BOTTOM	87
11	DRUM STAND LIGHTS	BOTTOM	75
12	GAS PUMP / COACH LIGHT	BOTTOM	91
13	SERVICE STA. RED	BOTTOM	92
14	SERIVCE STA. BLUE	BOTTOM	93
15	CAMPFIRE	BOTTOM	80
16	SUN SPOT	BOTTOM	88
17	MOON SPOT	BOTTOM	89
18	SPIDER SPOT	BOTTOM	90
19	GUITAR SPOT	BOTTOM	96

FLOOD LIGHTS

NO.	DESCRIPTION	DRAWER	L.D.#
B1	STAGE RIGHT BLUE	BOTTOM	66
G1	STAGE RIGHT GREEN	BOTTOM	67
A1	STAGE RIGHT AMBER	BOTTOM	68
R1	STAGE RIGHT RED	BOTTOM	69
B2	CENTER STAGE BLUE	BOTTOM	71
G2	N / A	BOTTOM	72
A2	CENTER STAGE AMBER	BOTTOM	73
R2	CENTER STAGE RED	BOTTOM	74
B3	STAGE LEFT BLUE	BOTTOM	76
G3	STAGE LEFT GREEN	BOTTOM	77
A3	STAGE LEFT AMBER	BOTTOM	78
R3	STAGE LEFT RED	BOTTOM	79

SCHEMATICS

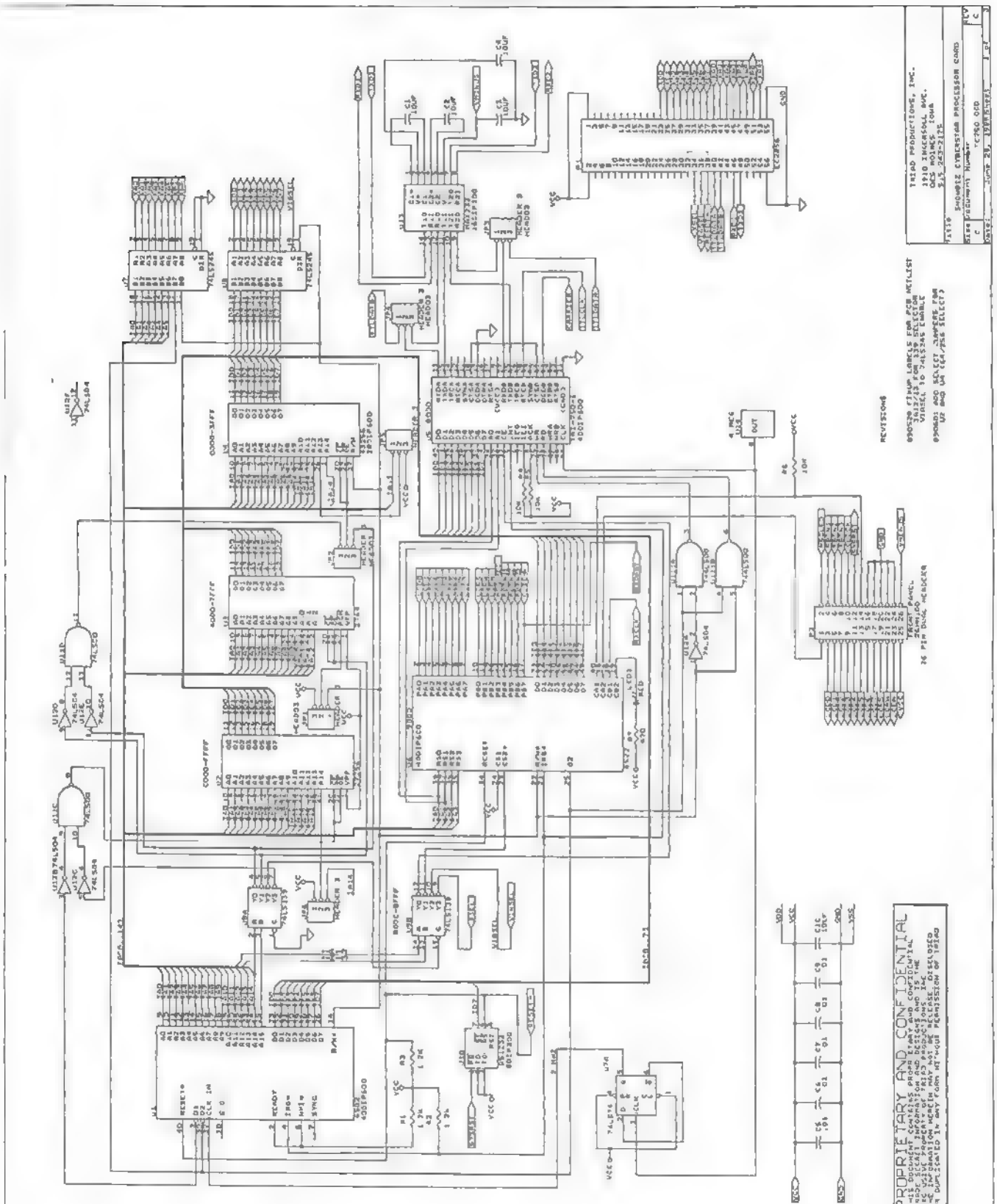

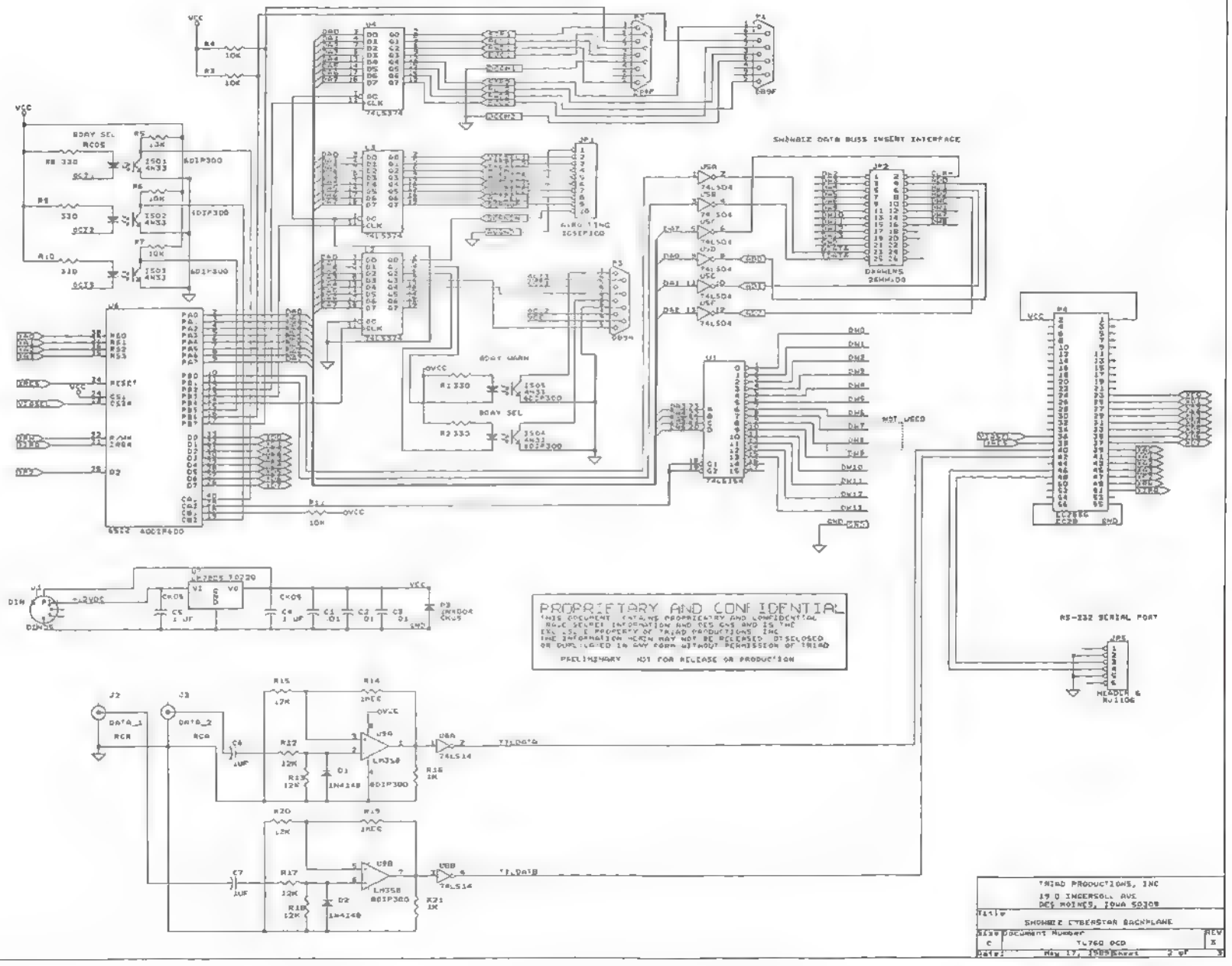
SNAKBIX DATA BUSS INSERT INTERFACE
PROPRIETARY AND CONFIDENTIAL
THIS DOCUMENT CONTAINS PROPRIETARY AND CONFIDENTIAL
RELEASED INFORMATION AND DESIGNS AND IS THE
EXCLUSIVE PROPERTY OF TRIAD PRODUCTIONS INC
THE INFORMATION HEREIN MAY NOT BE RELEASED DISCLOSED
OR DUPLICATED IN ANY FORM WITHOUT PERMISSION OF TRIAD
PRELIMINARY NOT FOR RELEASE OR PRODUCTION
RS-232 SERIAL PORT
TRIAD PRODUCTIONS, INC
19 D INGERSOLL AVE
DES MOINES, IOWA 50309
SNOWBIZ CYBERSTAR BACKPLANE
DOCUMENT NUMBER
T4760 OCD
REV
X
May 17, 1989

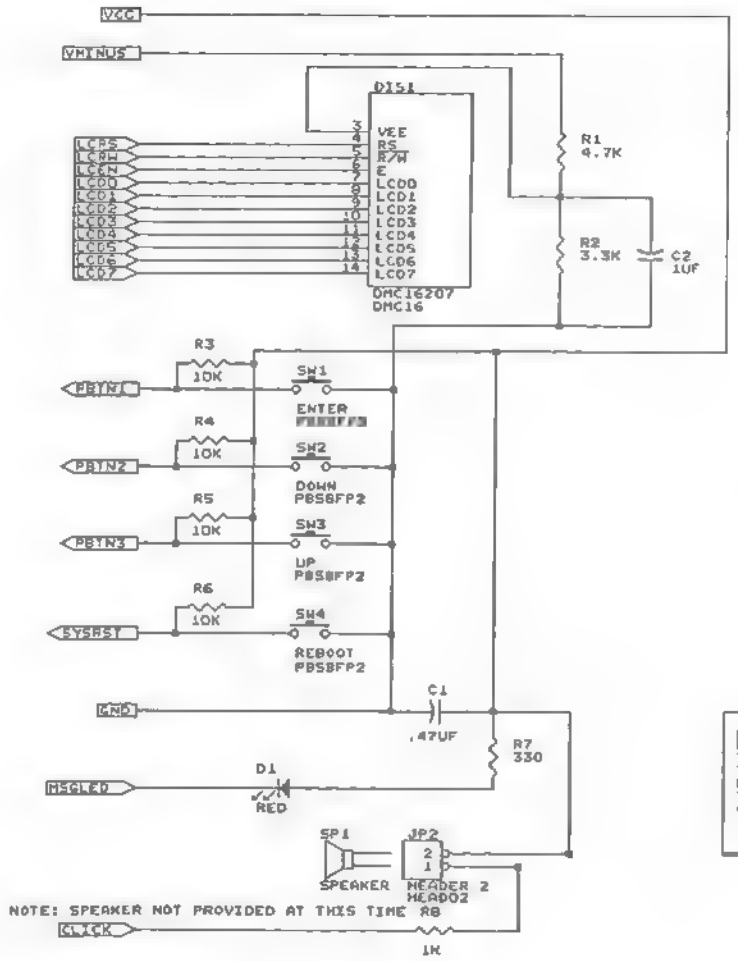

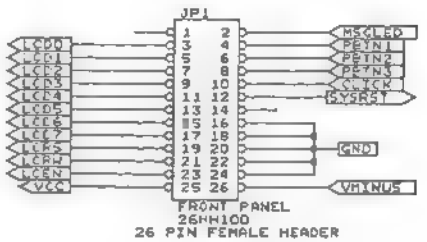

PROPRIETARY AND CONFIDENTIAL

THIS DOCUMENT CONTAINS PROPRIEATRY AND CONFIDENTIAL TRADE SECRET INFORMATION AND DESIGNS AND IS THE EXCLUSIVE PROPERTY OF TRIAD PRODUCTIONS, INC. THE INFORMATION HERIN MAY NOT BE RELEASED, DISCLOSED OR DUPLICATED IN ANY FORM WITHOUT PERMISSION OF TRIAD

PRELIMINARY — NOT FOR RELEASE OR PRODUCTION

REV D. ADDED PART VALUES, CHANGE D TO LED
REV. C — ADDED RESET BUTTON

TRIAD PRODUCTIONS, INC.
1910 INGERSOLL AVE.
DES MOINES, IOWA

Title		
CYBERSTAR SHOW CONTROLLER FRONT PANEL		
Size	Document Number	REV
B	TC77D.OCD	D
Date: May 17, 1989	Sheet 3 of 4	

SHOWBIZ CABLE ASSEMBLY

SHOW CONTROL UNIT TO AV ROUTING SWITCHER

SHOW CONTROL UNIT TO JVC VCR

JVC 34 PIN HIRSH CONNECTOR

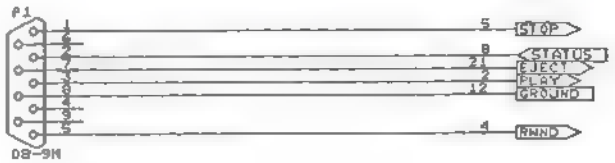

SHOW CONTROL UNIT TO SHOWBIZ DECODER DRAWERS

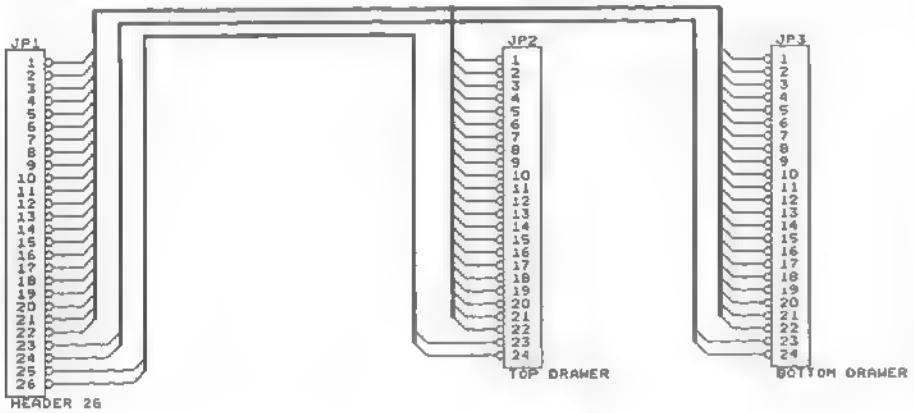

SHOW CONTROL UNIT TO MANAGERS PANEL BY OTHERS

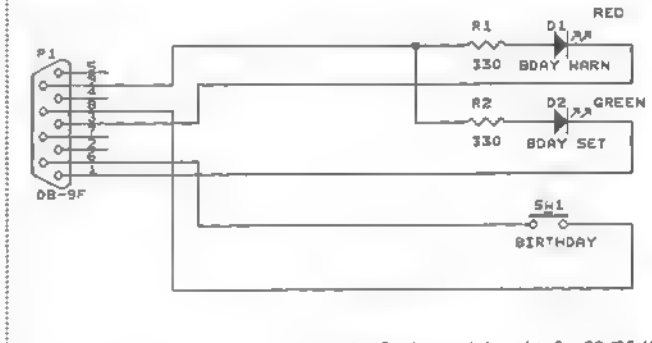

pin 2 changed to pin 6 89/06/16

5 VOLT DC POWER TO SHOW CONTROL UNIT

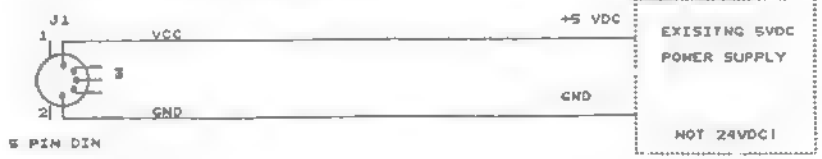

TRIAD PRODUCTIONS, INC. 1910 INGERSOLL AVE. DES MOINES, IOWA 50309		
Title: CYBERSTAR INTERFACE CABLE DETAIL		
Size: B	Document Number: CSTAR5.DCD	REV: B
Date: June 16, 1989	Sheet 4 of 4	

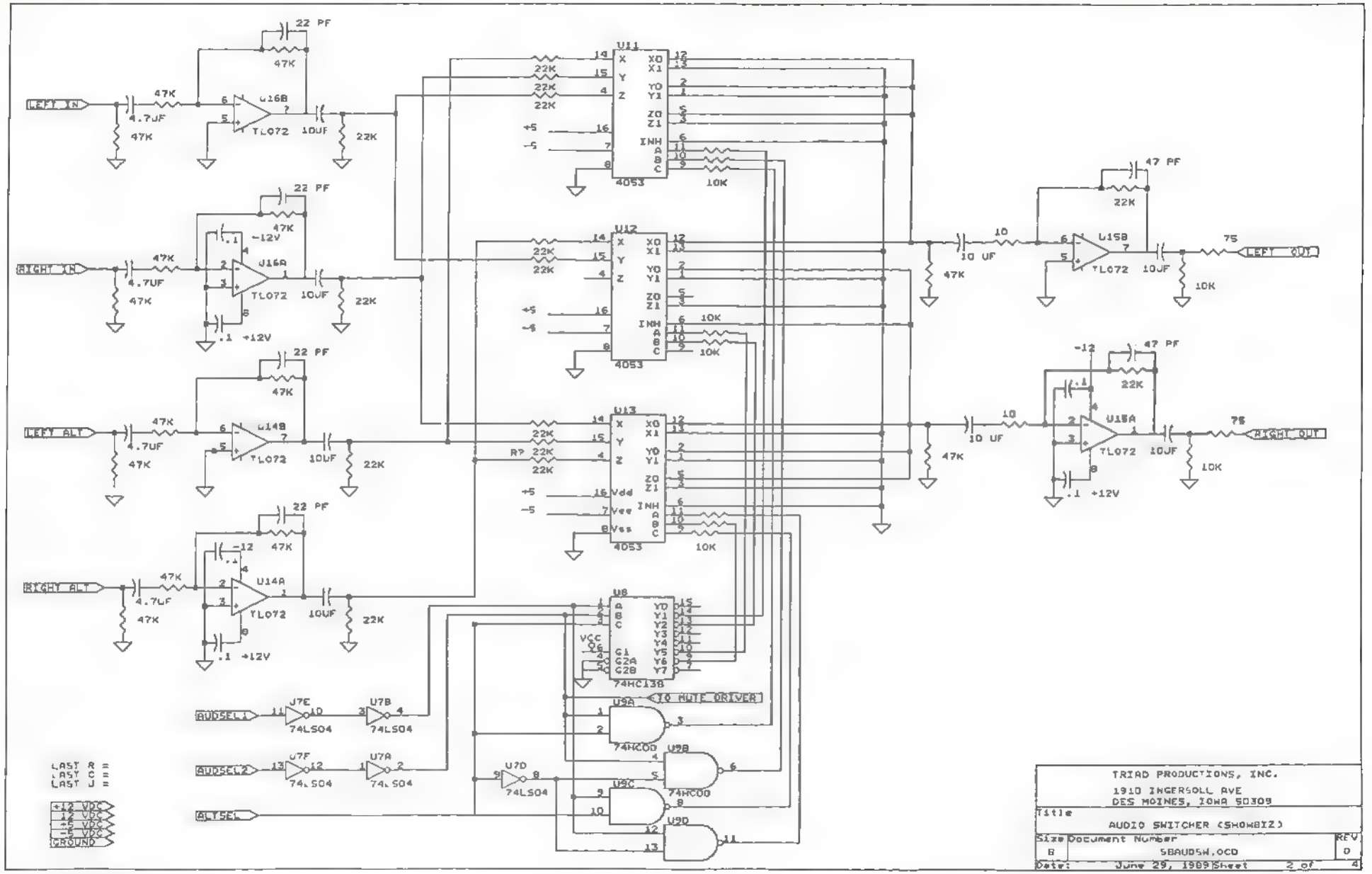
LEFT IN
RIGHT IN
LEFT ALT
RIGHT ALT
U16B
U16A
U14B
U14A
TL072
4053
74HC138
74LS04
74HC00
AUDSEL1
AUDSEL2
ALTSEL
TO MUTE DRIVER
LEFT OUT
RIGHT OUT
GROUND
TRIAD PRODUCTIONS, INC.
1910 INGERSOLL AVE
DES MOINES, IOWA 50309
AUDIO SWITCHER (SHOWBIZ)
SBAUDSW.OCD
June 29, 1989 Sheet 2 of 4

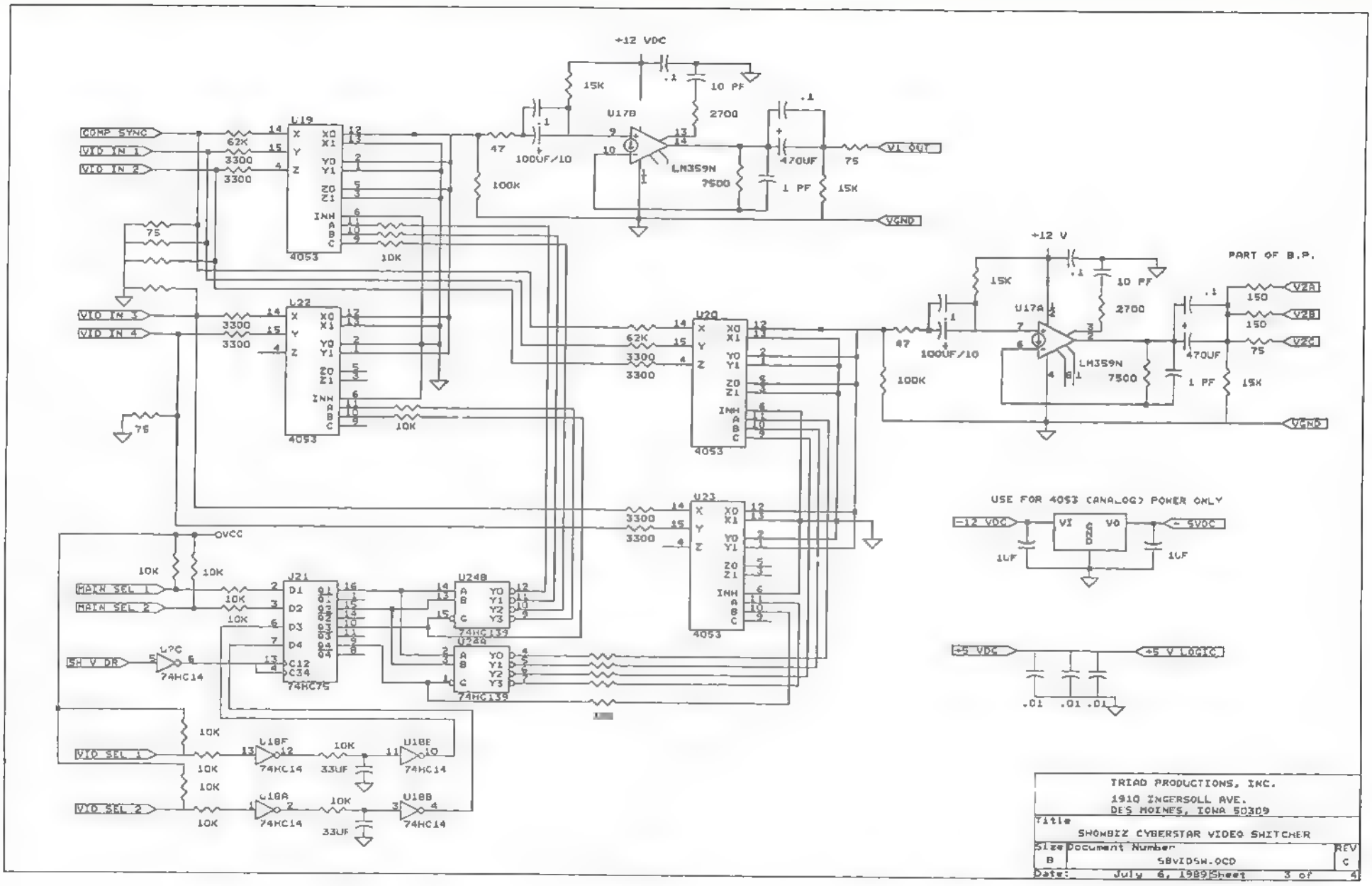
+12 VDC
COMP SYNC
VID IN 1
VID IN 2
VID IN 3
VID IN 4
MAIN SEL 1
MAIN SEL 2
SH V DR
VID SEL 1
VID SEL 2
OVCC
VI OUT
VGND
PART OF B.P.
USE FOR 4053 (ANALOG) POWER ONLY
-12 VDC
-5VDC
+5 VDC
+5 V LOGIC
4053
74HC14
74HC75
74HC139
LM359N
TRIAD PRODUCTIONS, INC.
1910 INGERSOLL AVE.
DES MOINES, IOWA 50309
SHOWBIZ CYBERSTAR VIDEO SWITCHER
SBVIDSW.OCD
July 6, 1989
Sheet 3 of 4

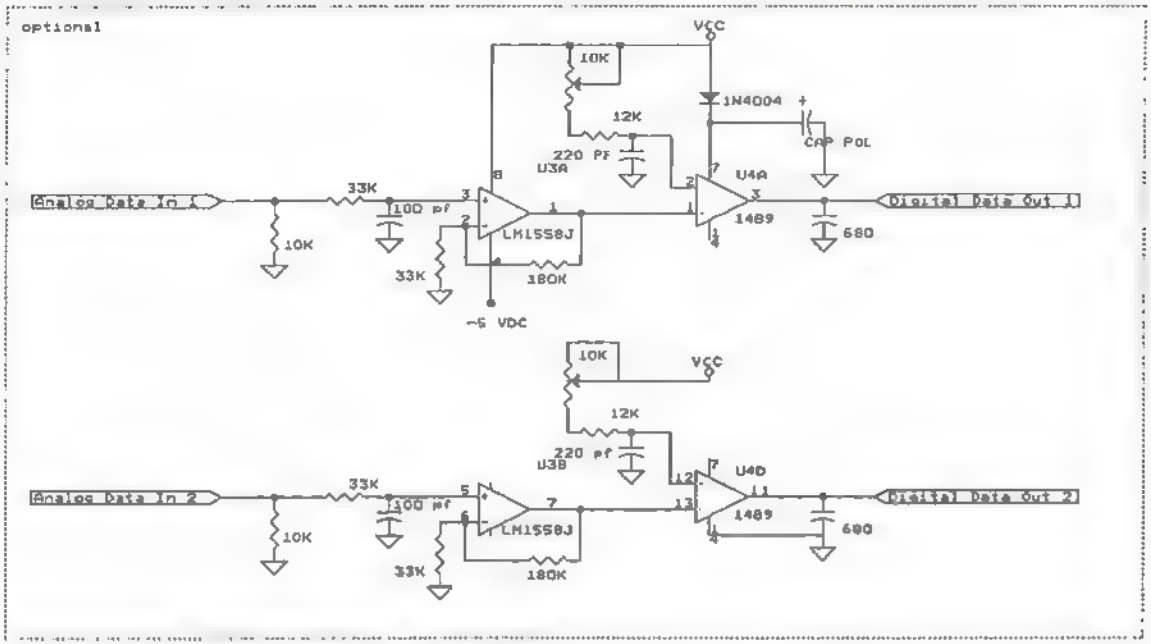

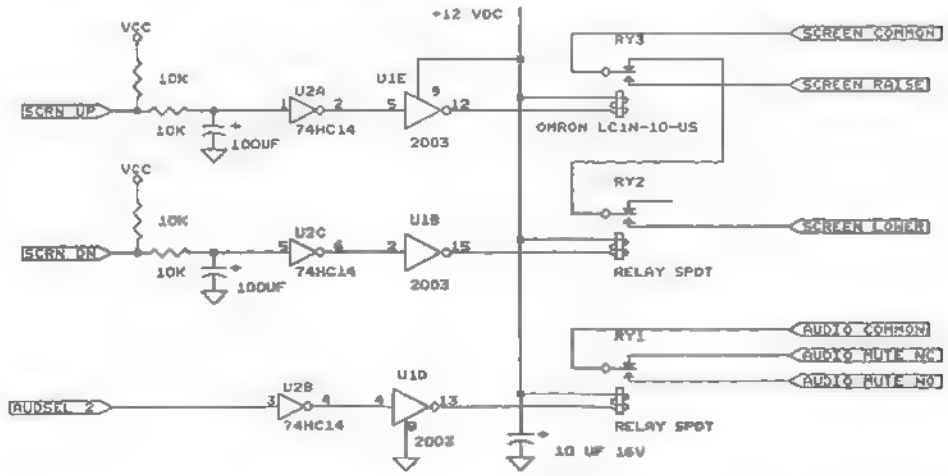

PROPRIETARY AND CONFIDENTIAL

Tried Productions, Inc. 1910 INGERSOLL AVE. DES MOINES, IOWA 50309		
Title: cybervision DATA SHAPER AND LOGIC		
Size: B	Document Number: SHOWBIx1.OCD	REV: C
Date: June 29, 1999	Sheet 1 of 4	

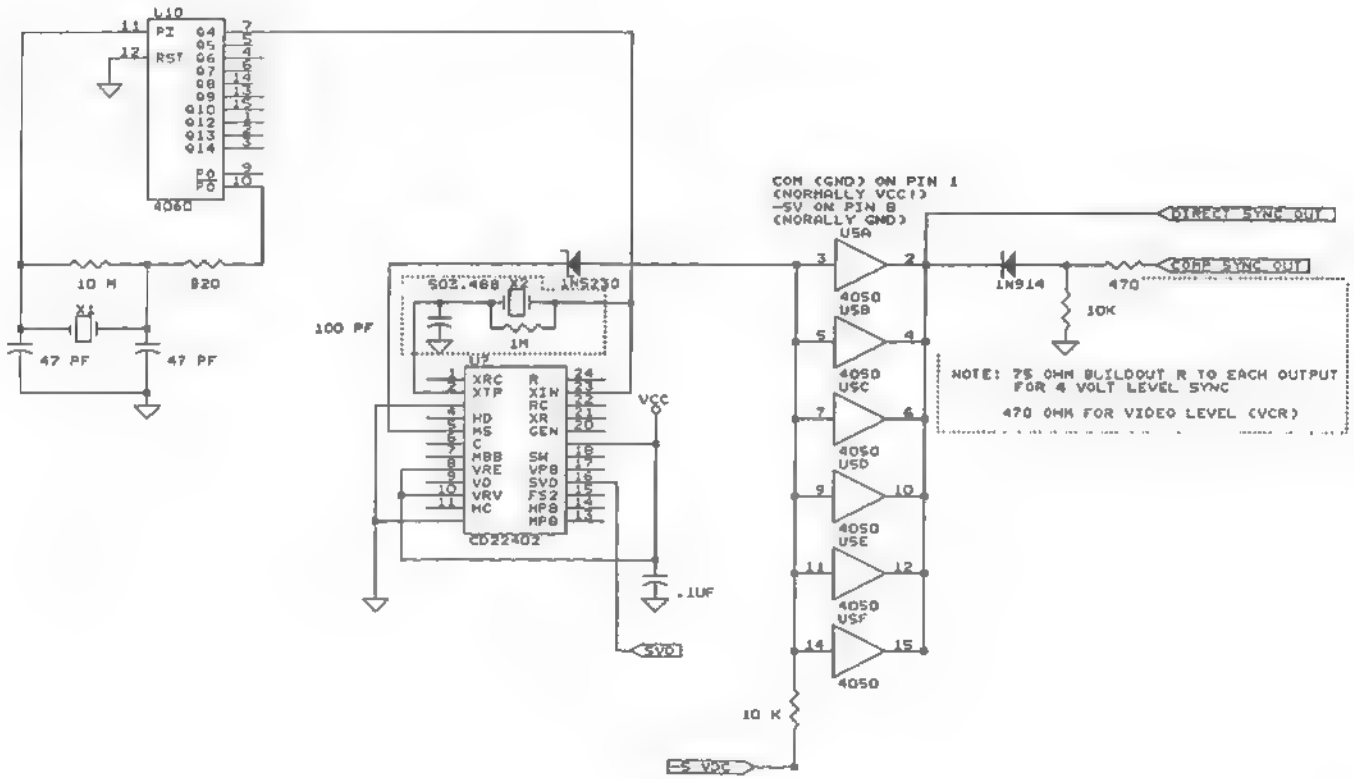

PROPRIETARY AND CONFIDENTIAL

TRIAD PRODUCTIONS, INC.
1910 INGERSOLL AVE.
DES MOINES, IOWA 50309

Title: SYNC GENERATOR

Size: B | Document Number: SBSYNCG.DCD | REV: C

Date: | Sheet of

CYBERSTAR TROUBLESHOOTING

SYMPTOM	CAUSE / ACTION
No sound	Check -5v. regulator in A/V box
Intermittent movements	Ribbon cable not plugged in tight in tunnel connections. Possible bad long driver card. Possible bad tape - try right normal VCR output.
System resets automatically and tape rewinds and starts over.	+5v. power supply problem
Video doesn't turn on until Birthday start or Show start. Audio noise at beginning of tape.	Part of tape has been erased. Replace tape.
No display on LCD and tape ejects when placed in VCR.	Ribbon Jumper cable from A/V Routing Switcher to Show Controller has one connector in upside down.

CYBERSTAR INSTALLATION AND OPERATION MANUAL

Date of Origin: 1989
Archived: 8-10-20
Submission by VegaNova
Version 1.0

The documents contained herein are for educational use only. Please do not replicate, redistribute, or make any unauthorized printings. All intellectual property including characters, artwork, photography, and slogans are trademark and/or copyright their respective owners.